Whirlpool YGEW9200LL2 01 - TOP AND CONSOLE PARTS

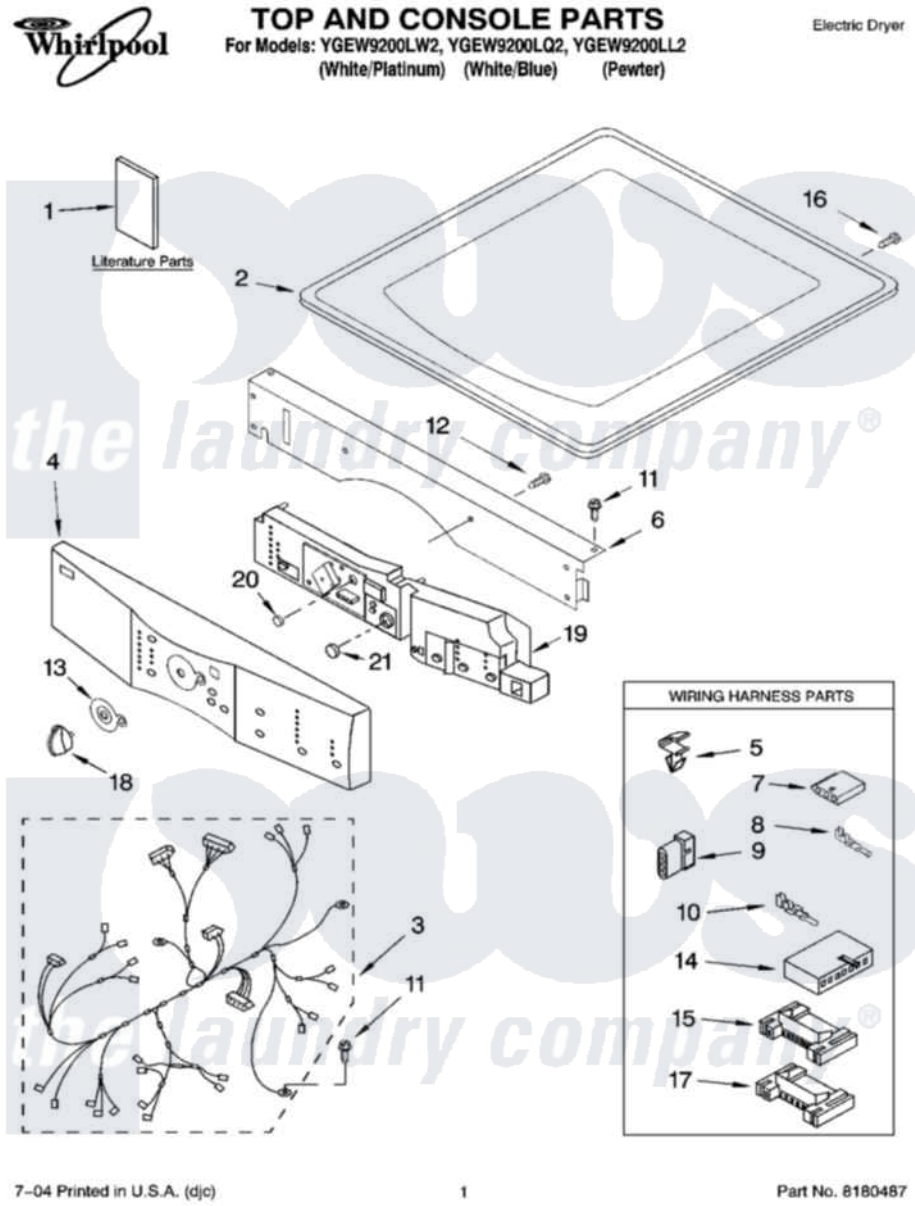

Whirlpool Residential Whirlpool YGEW9200LL2 Dryer Parts Parts Diagram 01 - TOP AND CONSOLE PARTS
Click on the part number to view part

Item	Original Part Number	Replaced By	Status	Part Description
1	8535903		Not Available	Label, Energy Guide
"	8533584		Not Available	Use & Care Guide
"	8541835		Not Available	Tech Sheet
2	8519251	W10117263		Top
"	3980096	3980357		Top
3	8529984		Not Available	Harness, Main
4	8530587			Panel, Console
"	8530588			Panel, Console
"	3980188			Panel, Console
5	3394427			Clip-Harness
6	8519271			Bracket, Console
7	353424			Plug, Terminal
8	94614			Terminal
9	3936144			Do-It-Yourself Repair Manuals
10	94613	596797		Terminal
11	3390647	488729		Screw

12	488886	488787	Screw
13	8519406		Bezel, Cycle
14	3936150		Connector, 7-Circuit
15	3395683		Receptacle, Multi-Terminal
16	8281225		Screw, 8-18 X 1/2
17	2203186		Connector, 5-Circuit
18	46197020472	8181859	Knob, Control
"	46197020471	8181881	Knob, Control
"	46197020742	8182050	Knob, Control
19	8530589		User Interface
"	8530590		User Interface
"	3980189		User Interface
20	8530591		Button, Start
21	8530592		Button, Pause/Cancel

the laundry company®
the laundry company®
the laundry company®