Whirlpool YWED9270XW0 02 - CABINET PARTS

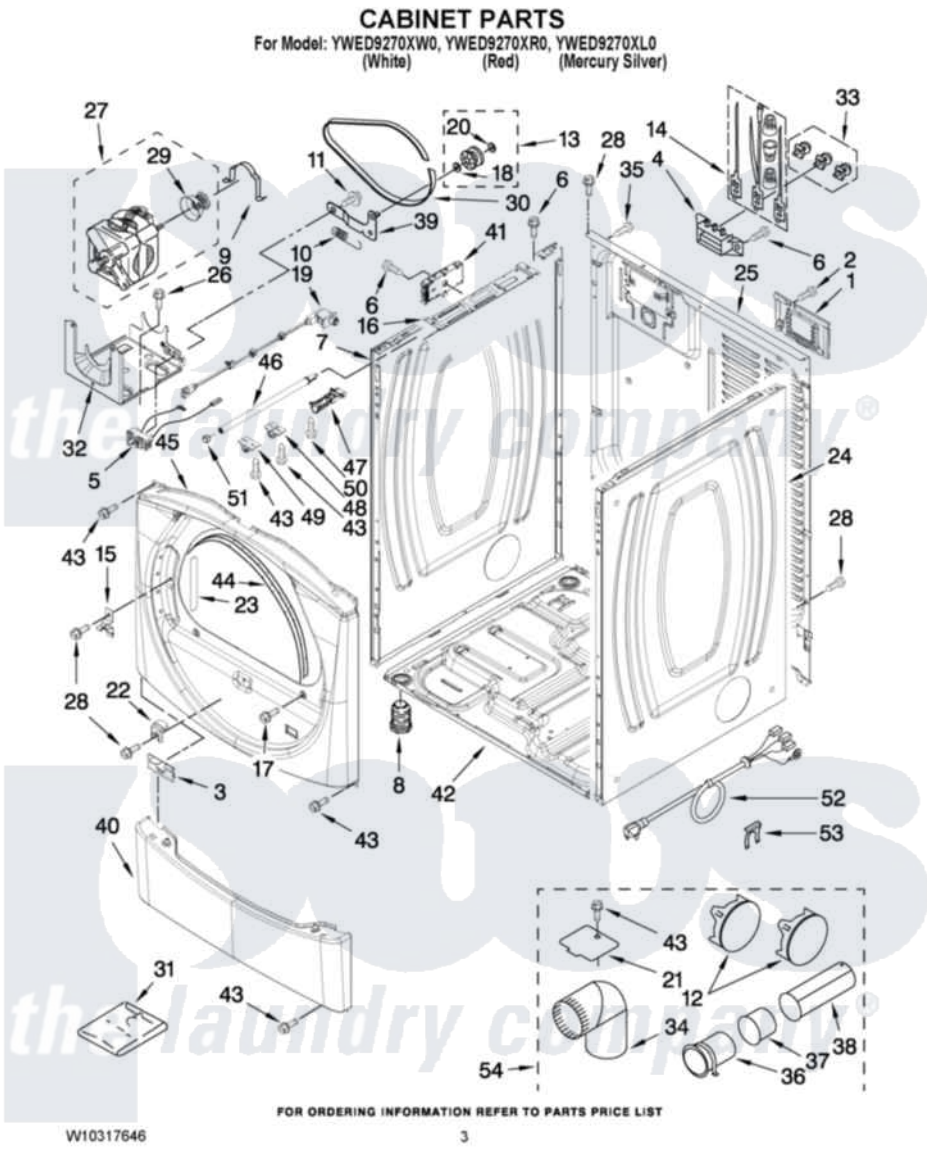

Whirlpool Residential Whirlpool YWED9270XW0 Dryer Parts Parts Diagram 02 - CABINET PARTS
Click on the part number to view part

Item	Original Part Number	Replaced By	Status	Part Description
1	W10286180	W10119283		Cover, Terminal Block
2	3390814	90767		Screw, 8A X 3/8 HeX Washer Head Tapping
3	8519459			Clip, Toe Panel
4	3397659			Block, Terminal
5	W10246525	W10314253		Switch, Assembly Broken Belt
6	90767			Screw, 8A X 3/8 HeX Washer Head Tapping
7	8565054			Panel, Side
"	W10251216			Panel, Side
"	W10251218			Panel, Side
8	3392100	49621		Feet-Leveling
NI	279810			Foot-Optional
9	660658			Clamp, Motor Mounting 343481 685441
10	3387374			Spring, Idler
11	3389420			Retainer-Idler 1/4-20 X 1/16

12	49252		Plug, Multivent
"	W10151499	W10404617	Plug, Multivent
13	3388672	279640	Pulley-Idr
14	279318		Terminal Tinned And Brass Panel
15	8565122		Strike, Door
16	W10103443		Bracket, Control Pogo
17	3357011	308685	Side Trim)
18	W10121334		Washer, Thrust
19	W10128087	W10318609	Switch, Assembly Door
20	690997		Washer, Thrust
21	8066115	3394331	Plate Cover
22	8580015		Ramp, Door
23	W10085210		Label-Hinge Hole Cover Front Panel
24	8565048		Panel, Side
"	W10251217		Panel, Side
"	W10251219		Panel, Side
25	W10281297		Panel, Rear
26	343641	681414	Screw, 10AB X 1/2
27	8538263	279787	Motor-Drve
28	3393008	308685	Side Trim)
29	8578220		Pulley, Motor
30	3387610	661570	Belt
31	8572546		Odor Remover
32	W10242878		Bracket, Motor Mounting
33	279393		Terminal Block Screw Kit
34	49026		4" - 90° Elbow
35	8533974	4331106	Screw, No.10-32 X 7/16
36	8563747		Exhaust Pipe Medium Pipe
37	8563750		Exhaust Pipe
38	8563749		Exhaust Pipe
39	3388674	W10118756	Idler Bracket
40	8540621		Panel, Toe
"	W10251209		Toe Panel
"	W10251210		Toe Panel
41	W10286015	W10405846	Control-Elec
42	8565046		(BROKEN BELT BASE, CABINET SWITCH)
43	3390647	488729	Screw
44	3387242		Seal, Front Panel
45	8580257		Front Panel
"	W10251201		Front Panel
"	W10251202		Front Panel
46	W10103457		Pogo Bar Assembly
47	W10101220		Housing Assembly
48	W10101183		Bushing-Sleeve
49	W10101184		Bushing-Sleeve Rear
50	304392	489069	Xxscrew, 10-12 X 1/2
51	W10011740		End Cap
52	8579325		Power Cord
53	694415		Clip, Strain Relief
54	279818	W10470674	Dryer Exhaust Kit
"	W10186596	W10470674	Dryer Exhaust Kit

the laundry company®

the laundry company®

the laundry company®